International Civil Aviation Organization

TWELFTH MEETING OF THE SOUTH EAST ASIA AND BAY OF BENGAL SUB-REGIONAL ADS-B IMPLEMENTAITON WORKING GROUP (SEA/BOB ADS-B WG/12)

Guangzhou, China, 08 – 10 November 2016

Agenda Item 4: Report on ground system and avionics performance monitoring and improvement in compliance

ADS-B UPDATE RATE PERFORMANCE MONITORING TOOLS

(Presented by AirNav Indonesia - Indonesia)

SUMMARY

This paper presents Indonesia's effort to monitor ADS-B Tier 1 implementation within Indonesian FIR and maintain highest level of safety during ADS-B Tier 1 implementation by monitoring ADS-B update rates as per ICAO Asia Pacific requirements.

1. INTRODUCTION

1.1 Indonesia has been Implementing ADS-B Tier-1 within Jakarta and Ujung Pandang FIR between FL290 to FL460 since 25 June 2015.

1.2 ICAO Asia Pacific has developed standards for contracting states to reference as baseline parameters for ADS-B Implementation among ICAO Asia Pacific contracting states in the BASELINE ADS-B SERVICE PERFORMANCE PARAMETERS Document.

1.3 Efforts and actions are taken by Indonesia to ensure ADS-B Tier 1 implementation in Indonesia meet the ICAO APAC baseline parameters. The monitoring systems described below are being developed "in house", using local expertise, as well as information on similar systems from Australia, shared through the ITSAP initiative

2. DISCUSSION

Efforts taken by ICAO Asia Pacific member states

2.1 ICAO Asia Pacific member states have continuously put efforts in ensuring ADS-B implementation conducted with the highest level of safety by ensuring that the ADS-B ground stations are operating in accordance with the standards.

2.2 Integrity monitoring, ground station performance monitoring are few examples of monitoring efforts conducted by ICAO Asia Pacific member states in order to ensure safety during ADS-B Implementation.

2.3 As more and more states have either implemented ADS-B or have commenced their implementation of ADS-B on their premises, a comprehensive ADS-B monitoring and evaluation become essential.

Importance of ADS-B Update Rate Monitoring during ADS-B Tier 1 Implementation

2.4 Indonesia is proposing ADS-B Update Rate Monitoring to be considered as one issue adopted by ICAO Asia Pacific member states to be focused on, in order to ensure safety during ADS-B Tier 1 Implementation.

2.5 "Aircraft Update" is defined as the rate at which the aircraft's position is updated to users[1]. Users of this context is ATC System used by ATC, as depicted in the picture below from point "A" to point "F".

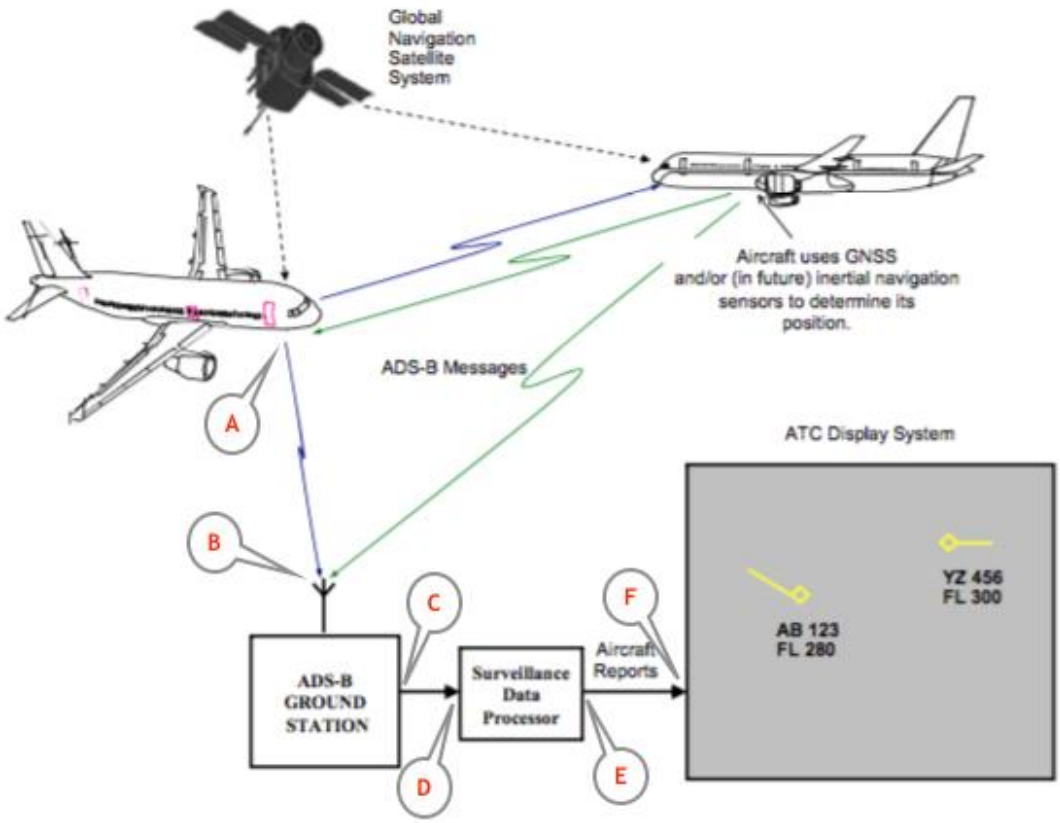

2.6 In ATC operational perspective, update rate is as important as data integrity, data validity and other ADS-B ground station performance issues. When all ADS-B data received from ground stations are valid, the integrity is good and the delivery is on time but the 'update rate' are not as per requirement defined in ICAO Asia Pacific BASELINE ADS-B SERVICE PERFORMANCE PARAMETERS Document then the data cannot be used for ATC separation purposes. For that

[1] Definition of "Update Rate" as in Guidance Material on Comparison of Surveillance Technologies (GMST) ICAO Document Edition 1.0 - September 2007, page 4

reason, in Indonesia point of view, ADS-B update rate is very important to be monitored continuously and states should work together to develop standard framework to monitor ADS-B update rate, especially for ADS-B Tier 1 Implementation.

ADS-B Update Rate Monitoring Mechanism and Monitoring tools in Indonesia

2.7 AirNav Indonesia has successfully developed an "in-house" application to monitor Aircraft Updates received by ATS System/SDP to ensure the requirements are kept during service and safety is maintained.

2.8 In order to be able to continuously monitor "Aircraft Update", Aircraft ADS-B Reports send through the ground station to Surveillance Data Processor (SDP) should be constantly monitored. Picture below shows data flow to monitor update rate from monitored aircraft to SDP.

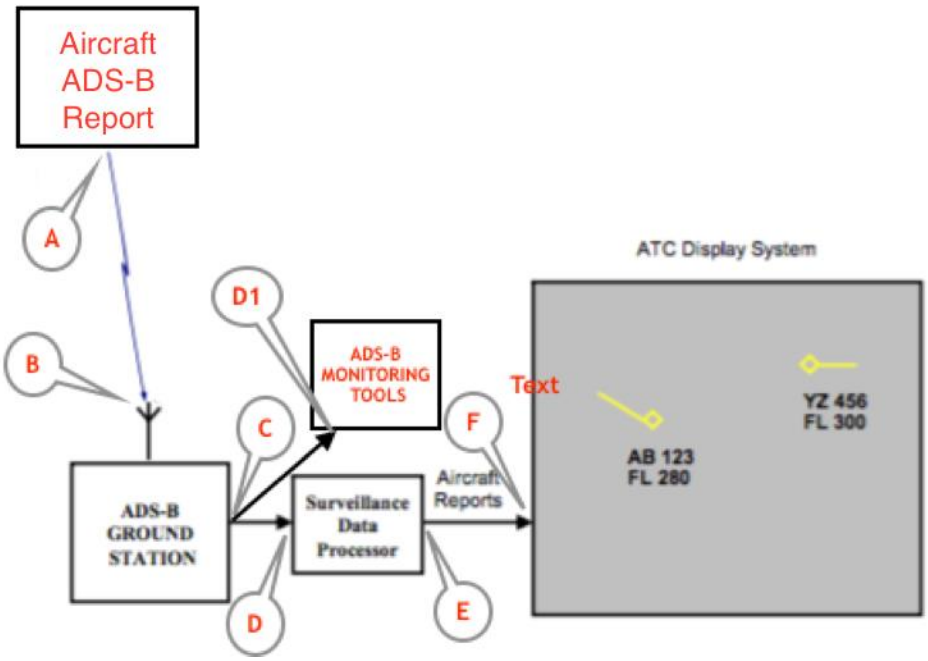

2.9 ADS-B Update Rate Monitoring Tools then configured within the same network with SDP and receives exactly the same data as the SDP. With this configuration ADS-B Monitoring tools can be considered as the "mimicking" SDP. Data received at point "D" will be exactly the same as the data received in point "D1".

2.10 The application then logs the ADS-B report in 1 (one) second interval, received from ground station(s), for each Aircraft detected. If interval of report received are within requirement it is shown in blue, if it exceeds 4 seconds, application would red-highlight the number, of the ground station data gap, as shown in the picture below.

2.11 When the application does not receive any updates for an aircraft for more than 15 seconds it will highlight the callsign with black background, as shown in the picture below.

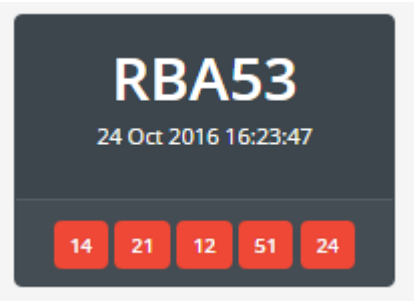

2.12 Aircraft ADS-B data received by the SDP within the monitored region, in Indonesia the application sets to monitor both Jakarta ACC and Ujung Pandang ACC from FL290 up to FL460 only, are logged individually per callsign in daily bases. The application then creates daily report for each Aircraft for number of ADS-B data received within defined parameter and number of ADS-B data received outside parameter.

2.13 The application also creates performance report for each ground station based on number of interval (gap) of data receives.

2.14 Daily report for each Aircraft for number of ADS-B data received then submitted to Safety and Operation Directorate for further analysis. Performance report for each ground station is submitted to Engineering Directorate for further analysis.

3. ACTION BY THE MEETING

3.1 The meeting is invited to:

a) note the information above;

b) urges States to develop framework to monitor ADS-B Update Rate for Implementation and pre implementation of ADS-B Tier 1; and

c) to set up a small working group between States to facilitate the development of framework for ADS-B Update Rate Monitoring;

– – – – – – – – – – – – – –